Chapter 3
Transport Layer

Reti degli Elaboratori
Canale AL
Prof.ssa Chiara Petrioli
a.a. 2014/2015

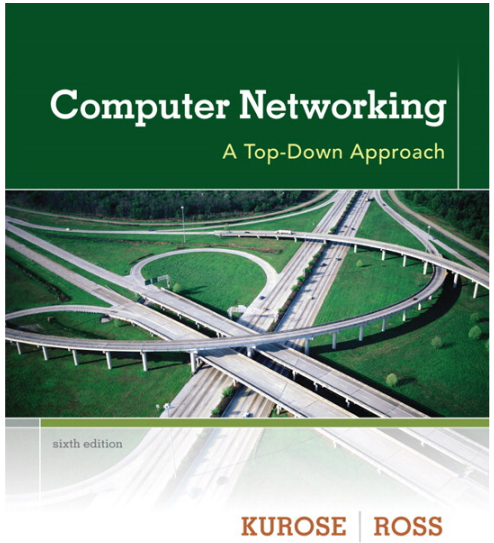

Computer Networking: A Top Down Approach
6th edition
Jim Kurose, Keith Ross
Addison-Wesley
March 2012

We thank for the support material Prof. Kurose-Ross

Pure P2P architecture-

Technical Motivation

- *no* always-on server
- arbitrary end systems directly communicate
- peers are intermittently connected and change IP addresses

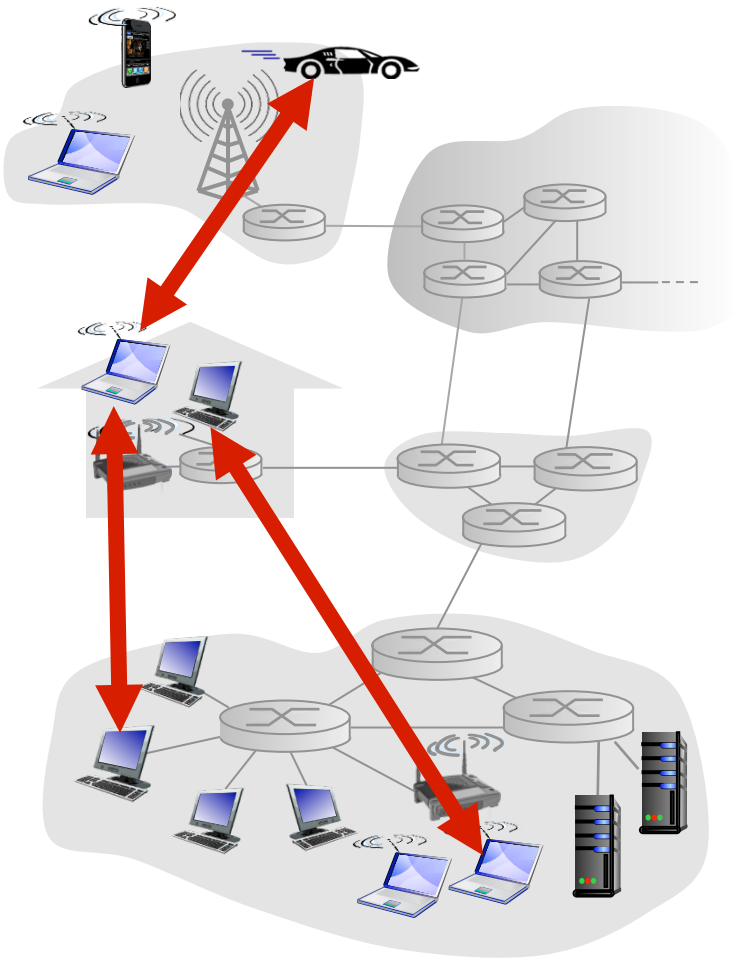

examples:

- file distribution (BitTorrent)
- Streaming (KanKan)
- VoIP (Skype)

File distribution: client-server vs P2P

Question: how much time to distribute file (size *F*) from one server to *N* *peers*?

- peer upload/download capacity is limited resource

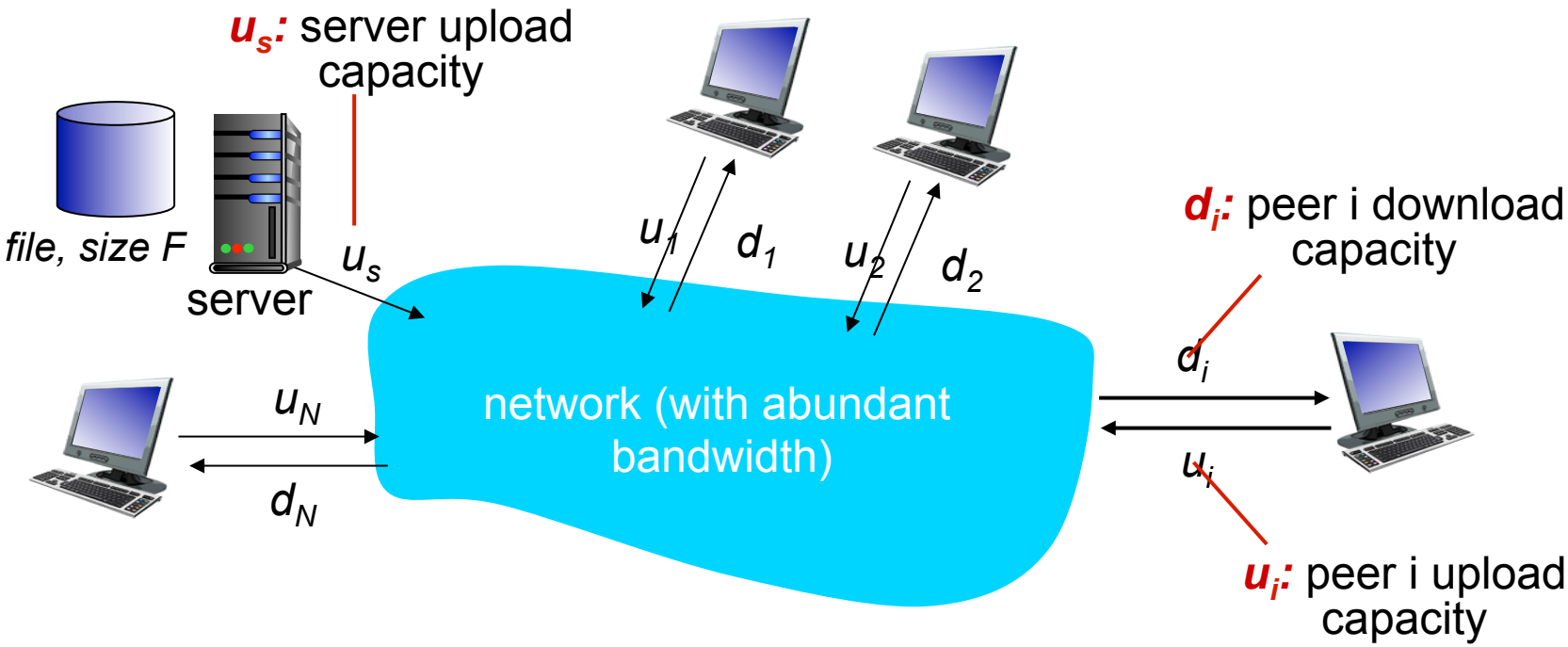

File distribution time: client-server

- *server transmission:* must sequentially send (upload) *N* file copies:
  - time to send one copy: F/u_s
  - time to send N copies: NF/u_s
- *client:* each client must download file copy
  - d_{min} = min client download rate
  - min client download time: F/d_{min}

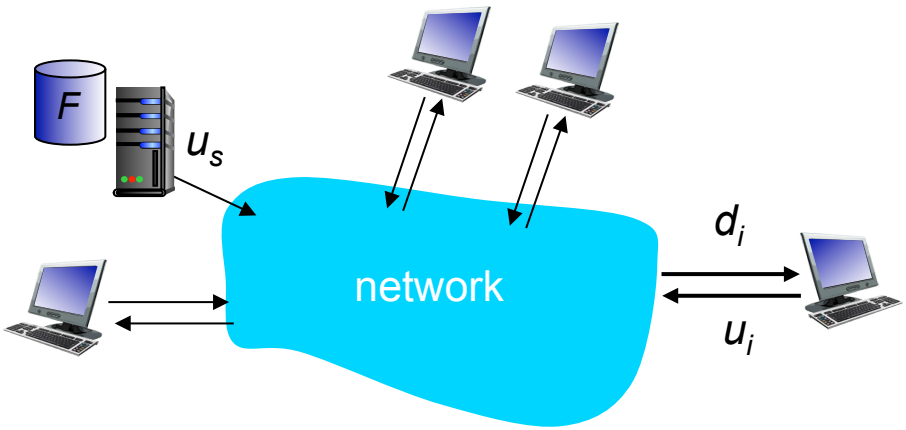

increases linearly in N

time to distribute F to N clients using client-server approach

$$D_{c\text{-}s} \geq \max\{NF/u_s, F/d_{min}\}$$

File distribution time: P2P

- *server transmission:* must upload at least one copy
  - time to send one copy: F/u_s
- *client:* each client must download file copy
  - min client download time: F/d_{min}

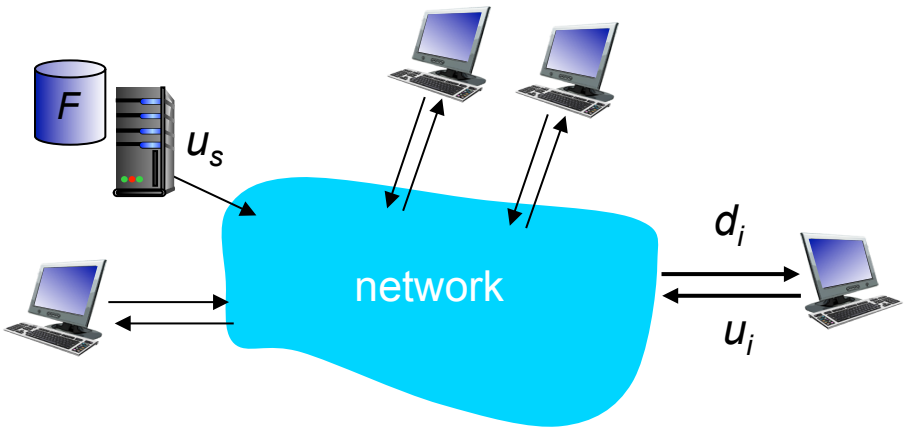

- *clients:* as aggregate must download *NF* bits
  - max upload rate (limiting max download rate) is $u_s + \Sigma u_i$

time to distribute F to N clients using P2P approach

$$D_{P2P} \geq max\{F/u_s, F/d_{min}, NF/(u_s + \Sigma u_i)\}$$

increases linearly in *N* …

… but so does this, as each peer brings service capacity

Client-server vs. P2P: example

client upload rate = u, F/u = 1 hour, $u_s = 10u$, $d_{min} \geq u_s$

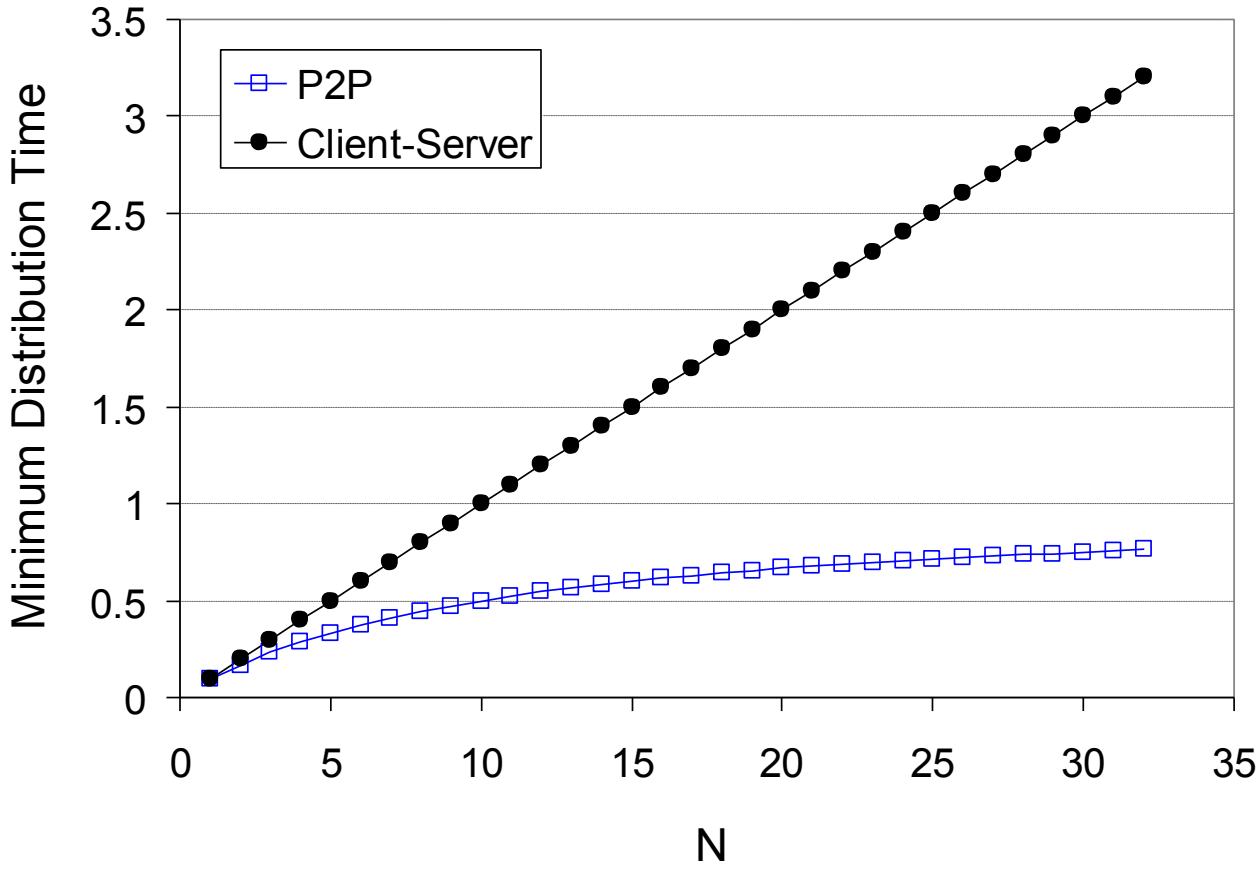

Chapter 3: Transport Layer

our goals:

- understand principles behind transport layer services:
  - multiplexing, demultiplexing
  - reliable data transfer
  - flow control
  - congestion control
- learn about Internet transport layer protocols:
  - UDP: connectionless transport
  - TCP: connection-oriented reliable transport
  - TCP congestion control

Chapter 3 outline

3.1 transport-layer services

3.2 multiplexing and demultiplexing

3.3 connectionless transport: UDP

3.4 principles of reliable data transfer

3.5 connection-oriented transport: TCP

- segment structure
- reliable data transfer
- flow control
- connection management

3.6 principles of congestion control

3.7 TCP congestion control

Transport services and protocols

- provide *logical communication* between app processes running on different hosts
- transport protocols run in end systems
  - send side: breaks app messages into *segments*, passes to network layer
  - rcv side: reassembles segments into messages, passes to app layer
- more than one transport protocol available to apps
  - Internet: TCP and UDP

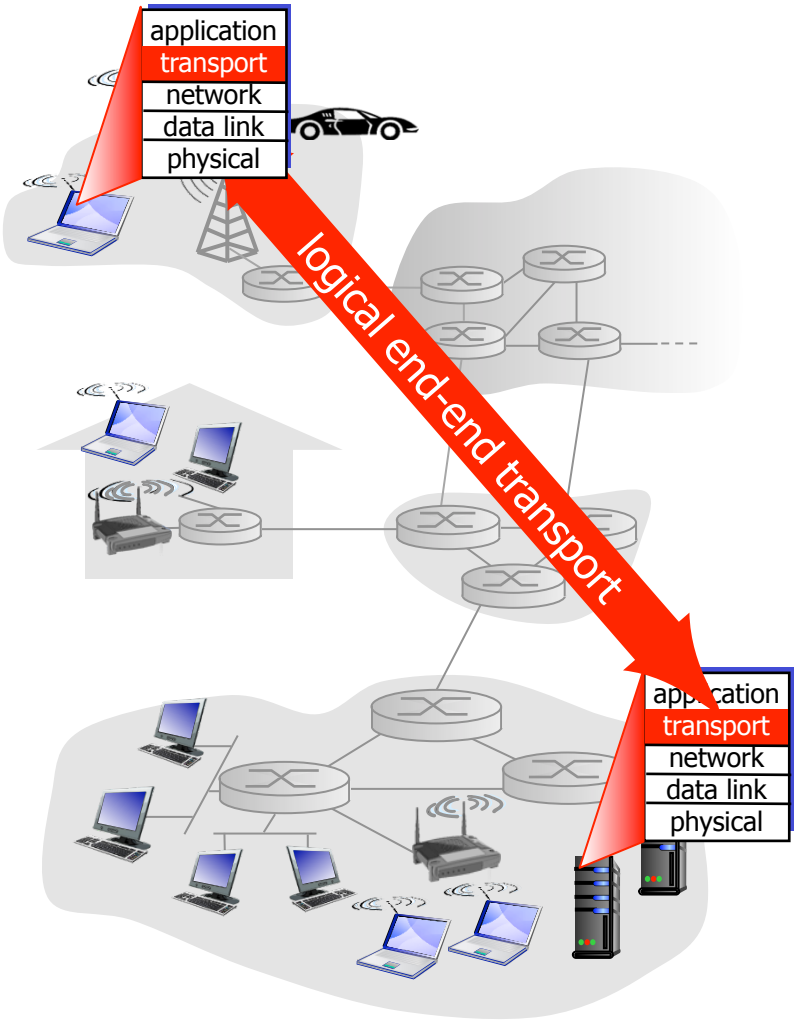

Transport vs. network layer

- *network layer:* logical communication between hosts
- *transport layer:* logical communication between processes
  - relies on, enhances, network layer services

household analogy:

12 kids in Ann's house sending letters to 12 kids in Bill's house:

- hosts = houses
- processes = kids
- app messages = letters in envelopes
- transport protocol = Ann and Bill who demux to in-house siblings
- network-layer protocol = postal service

Internet transport-layer protocols

- reliable, in-order delivery (TCP)
  - congestion control
  - flow control
  - connection setup
- unreliable, unordered delivery: UDP
  - no-frills extension of "best-effort" IP
- services not available:
  - delay guarantees
  - bandwidth guarantees

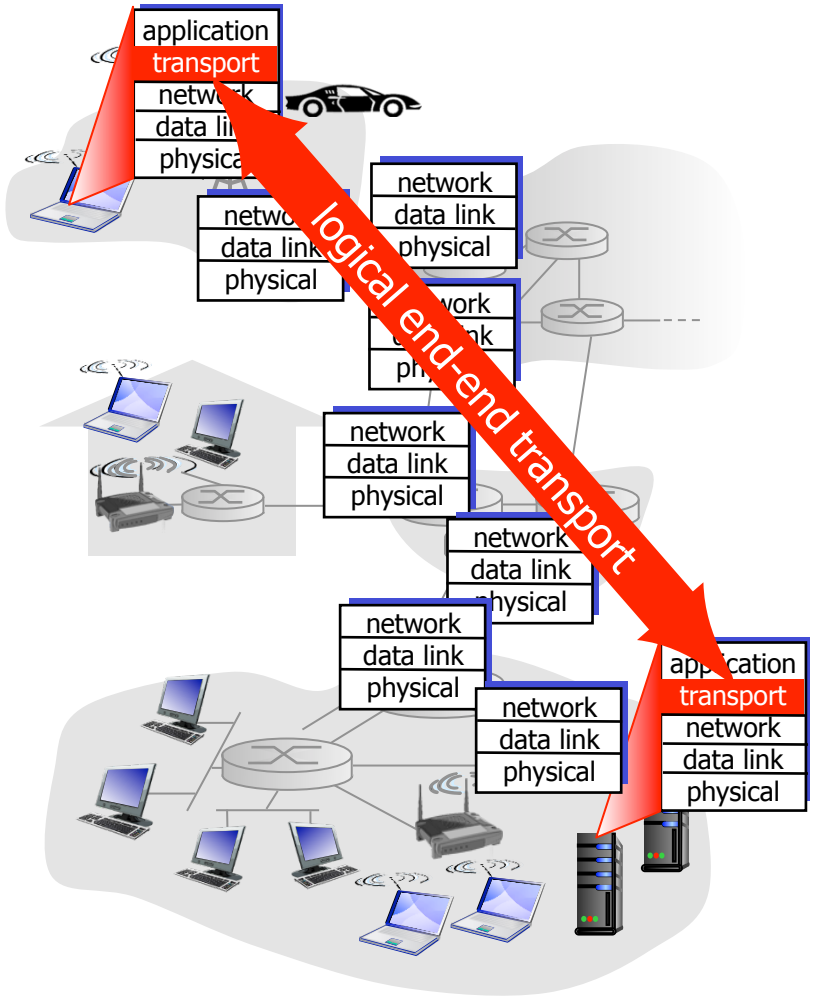

Chapter 3 outline

3.1 transport-layer services

3.2 multiplexing and demultiplexing

3.3 connectionless transport: UDP

3.4 principles of reliable data transfer

3.5 connection-oriented transport: TCP

- segment structure
- reliable data transfer
- flow control
- connection management

3.6 principles of congestion control

3.7 TCP congestion control

Multiplexing/demultiplexing

multiplexing at sender:
handle data from multiple sockets, add transport header (later used for demultiplexing)

demultiplexing at receiver:
use header info to deliver received segments to correct socket

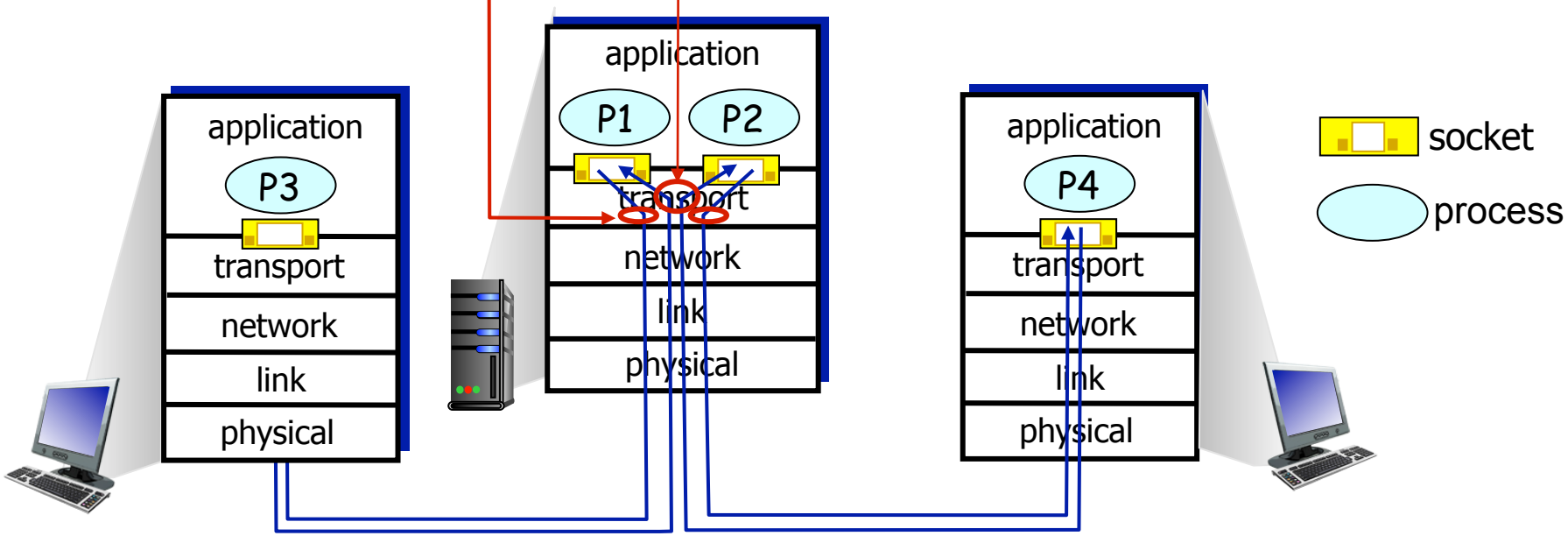

How demultiplexing works

- host receives IP datagrams
  - each datagram has source IP address, destination IP address
  - each datagram carries one transport-layer segment
  - each segment has source, destination port number
- host uses *IP addresses & port numbers* to direct segment to appropriate socket

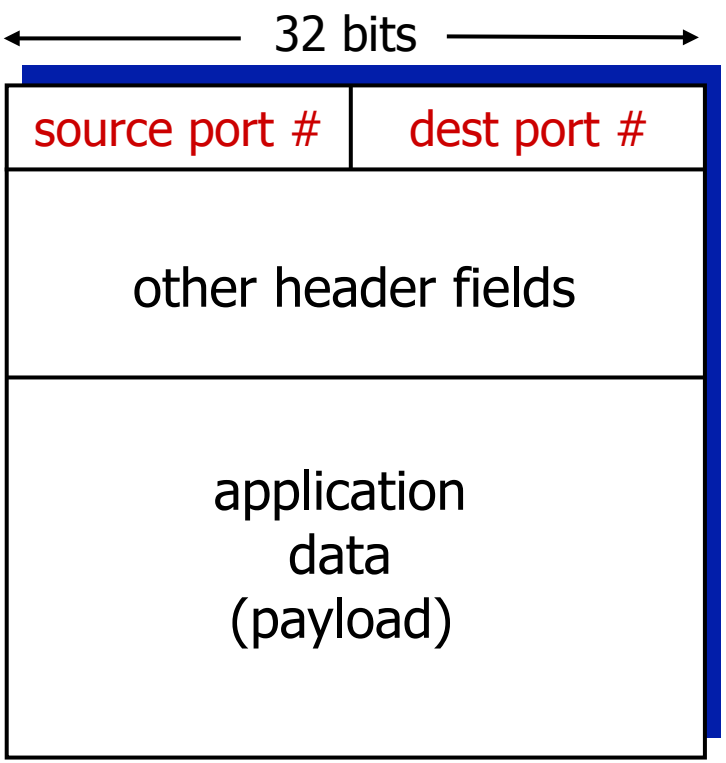

TCP/UDP segment format

Connectionless demultiplexing

- *recall:* created socket has host-local port #:

```
DatagramSocket mySocket1
= new DatagramSocket(12534);
```

- *recall:* when creating datagram to send into UDP socket, must specify
  - destination IP address
  - destination port #

- when host receives UDP segment:
  - checks destination port # in segment
  - directs UDP segment to socket with that port #

IP datagrams with *same dest. port #,* but different source IP addresses and/or source port numbers will be directed to *same socket* at dest

Connectionless demux: example

```
DatagramSocket
 mySocket2 = new
 DatagramSocket
 (9157);
```

```
DatagramSocket
 serverSocket = new
 DatagramSocket
 (6428);
```

```
DatagramSocket
 mySocket1 = new
 DatagramSocket
 (5775);
```

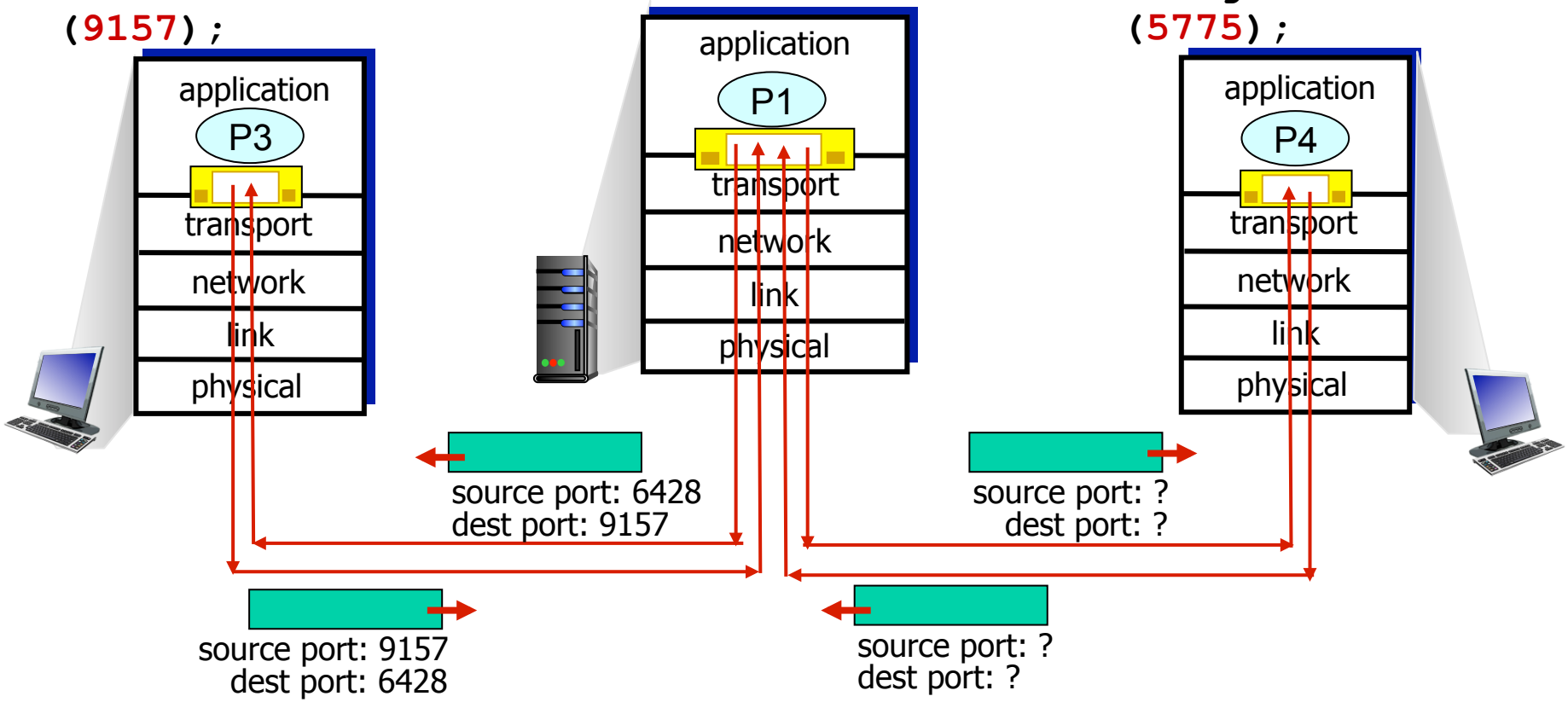

Connection-oriented demux

- TCP socket identified by 4-tuple:
  - source IP address
  - source port number
  - dest IP address
  - dest port number
- demux: receiver uses all four values to direct segment to appropriate socket
- server host may support many simultaneous TCP sockets:
  - each socket identified by its own 4-tuple
- web servers have different sockets for each connecting client
  - non-persistent HTTP will have different socket for each request

Connection-oriented demux: example

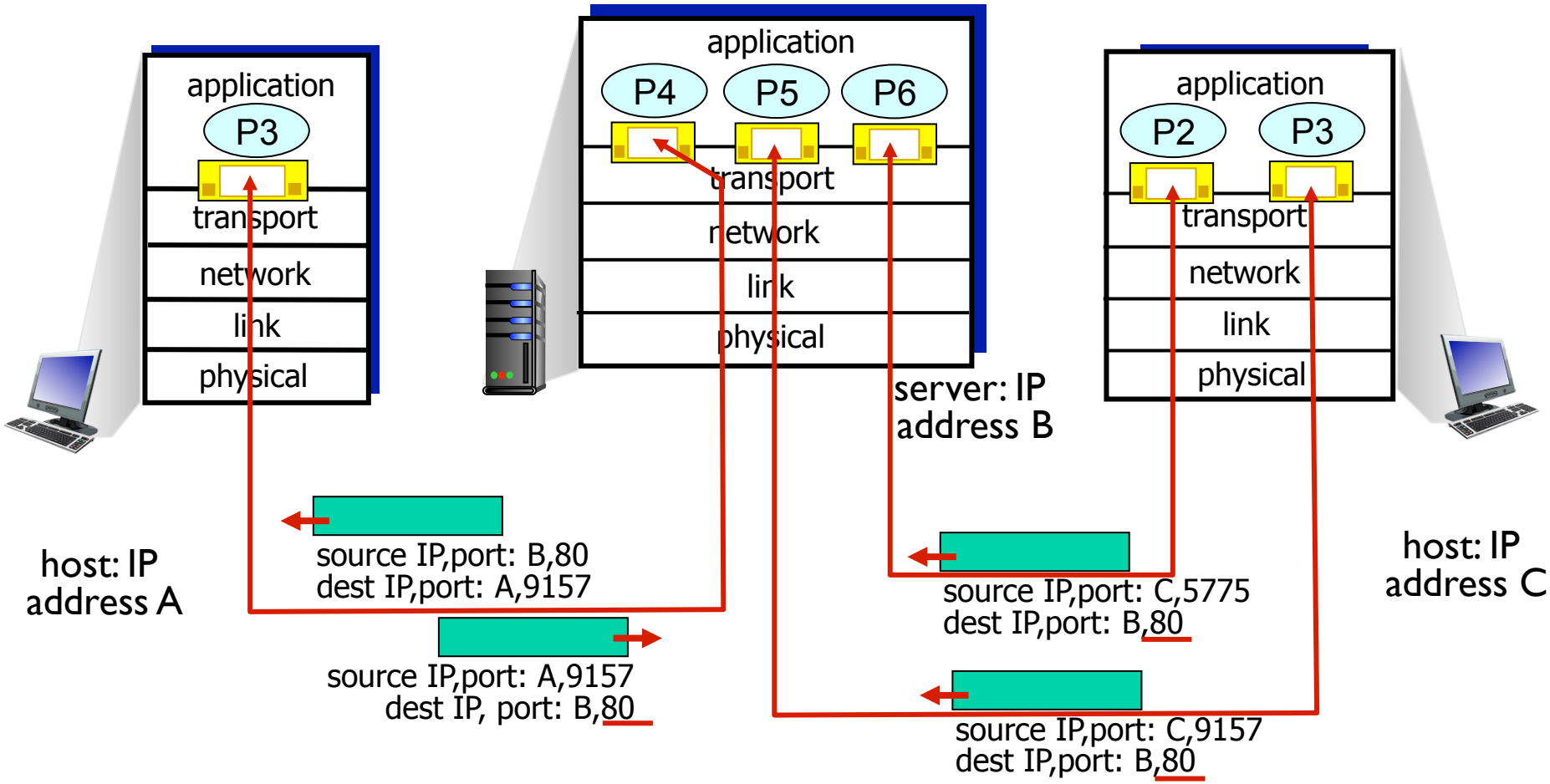

three segments, all destined to IP address: B, dest port: 80 are demultiplexed to *different* sockets

Connection-oriented demux: example

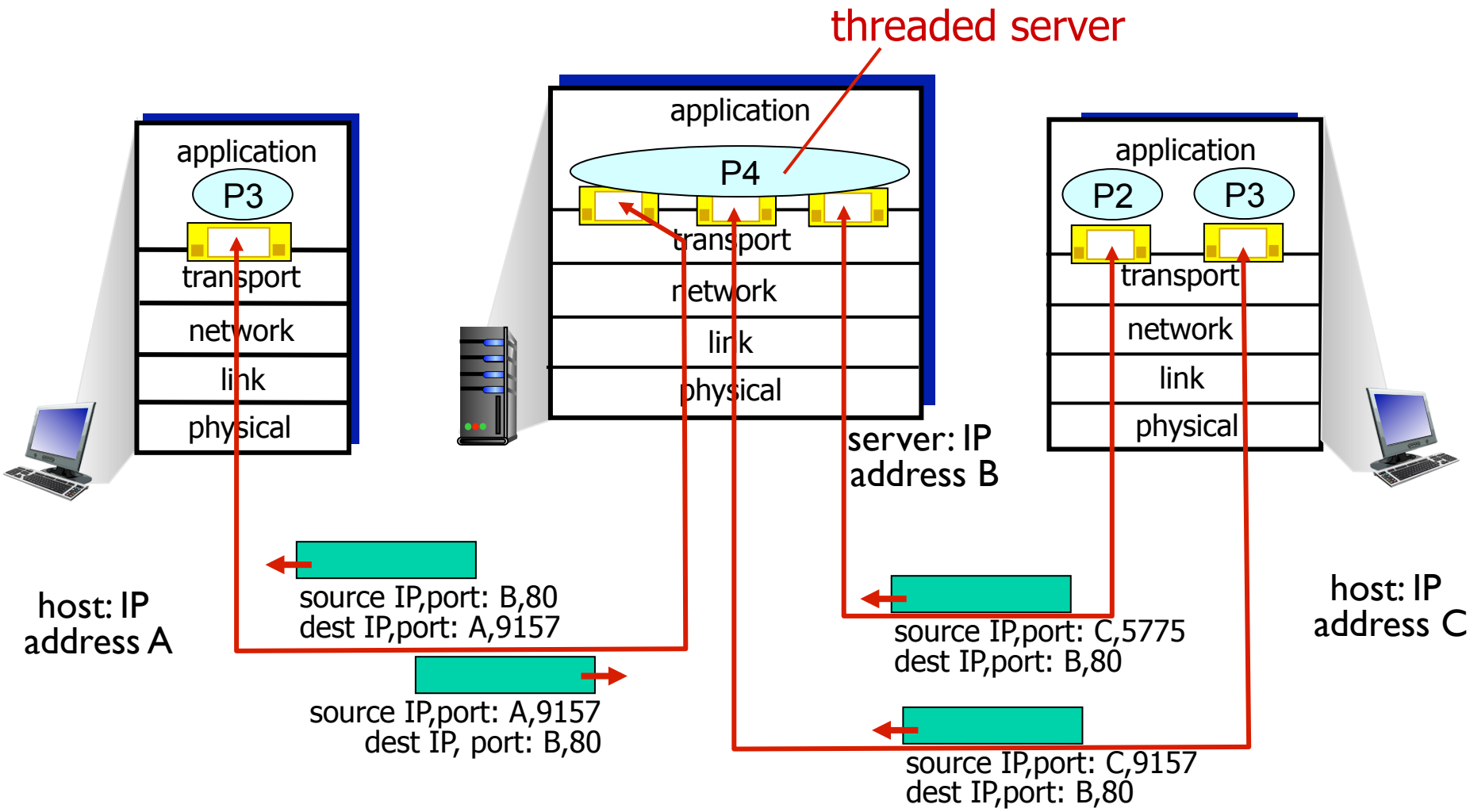

Chapter 3 outline

3.1 transport-layer services

3.2 multiplexing and demultiplexing

3.3 connectionless transport: UDP

3.4 principles of reliable data transfer

3.5 connection-oriented transport: TCP

- segment structure
- reliable data transfer
- flow control
- connection management

3.6 principles of congestion control

3.7 TCP congestion control

UDP: User Datagram Protocol [RFC 768]

- "no frills," "bare bones" Internet transport protocol
- "best effort" service, UDP segments may be:
  - lost
  - delivered out-of-order to app
- *connectionless:*
  - no handshaking between UDP sender, receiver
  - each UDP segment handled independently of others
- UDP use:
  - streaming multimedia apps (loss tolerant, rate sensitive)
  - DNS
  - SNMP
- reliable transfer over UDP:
  - add reliability at application layer
  - application-specific error recovery!

UDP: segment header

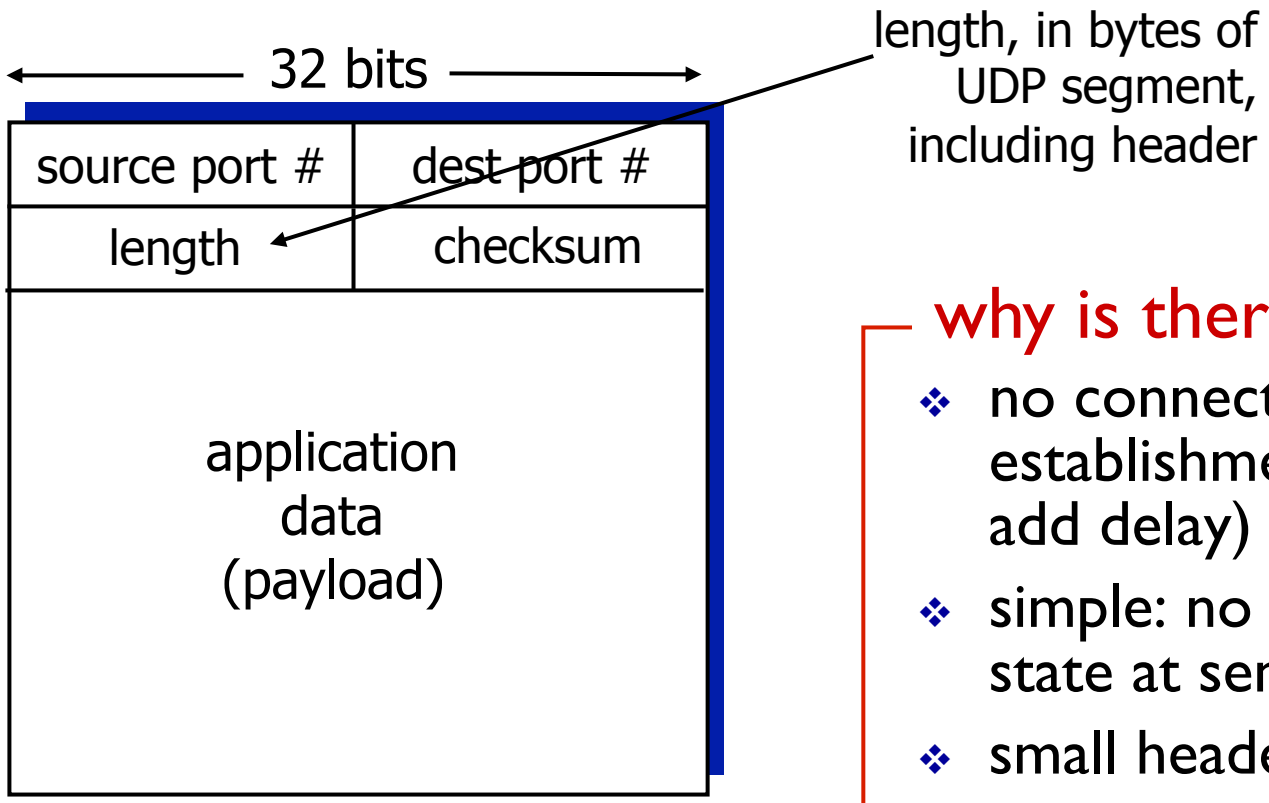

UDP segment format

why is there a UDP?

- no connection establishment (which can add delay)
- simple: no connection state at sender, receiver
- small header size
- no congestion control: UDP can blast away as fast as desired

UDP checksum

Goal: detect "errors" (e.g., flipped bits) in transmitted segment

sender:

- treat segment contents, including header fields, as sequence of 16-bit integers
- checksum: addition (one's complement sum) of segment contents
- sender puts checksum value into UDP checksum field

receiver:

- compute checksum of received segment
- check if computed checksum equals checksum field value:
  - NO - error detected
  - YES - no error detected. *But maybe errors nonetheless?* More later ….

Internet checksum: example

example: add two 16-bit integers

		1	1	1	0	0	1	1	0	0	1	1	0	0	1	1	0
		1	1	0	1	0	1	0	1	0	1	0	1	0	1	0	1
wraparound	1	1	0	1	1	1	0	1	1	1	0	1	1	1	0	1	1
sum		1	0	1	1	1	0	1	1	1	0	1	1	1	1	0	0
checksum		0	1	0	0	0	1	0	0	0	1	0	0	0	0	1	1

Note: when adding numbers, a carryout from the most significant bit needs to be added to the result

Chapter 3 outline

3.1 transport-layer services

3.2 multiplexing and demultiplexing

3.3 connectionless transport: UDP

3.4 principles of reliable data transfer

3.5 connection-oriented transport: TCP

- segment structure
- reliable data transfer
- flow control
- connection management

3.6 principles of congestion control

3.7 TCP congestion control

Principles of reliable data transfer

- important in application, transport, link layers
  - top-10 list of important networking topics!

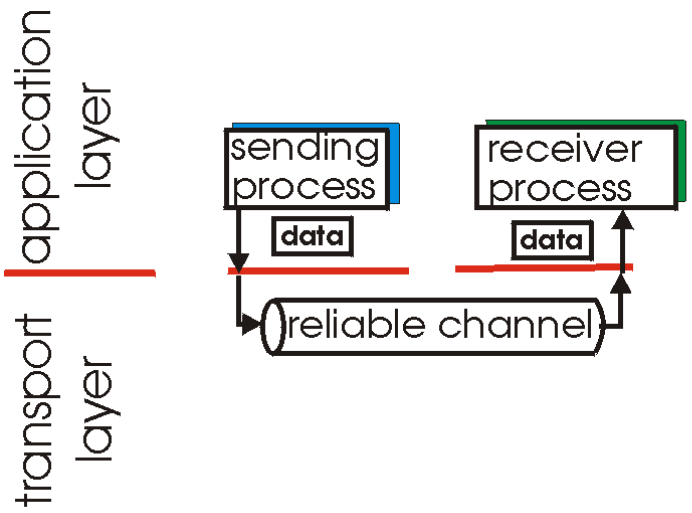

(a) provided service

- characteristics of unreliable channel will determine complexity of reliable data transfer protocol (rdt)

Principles of reliable data transfer

- important in application, transport, link layers
  - top-10 list of important networking topics!

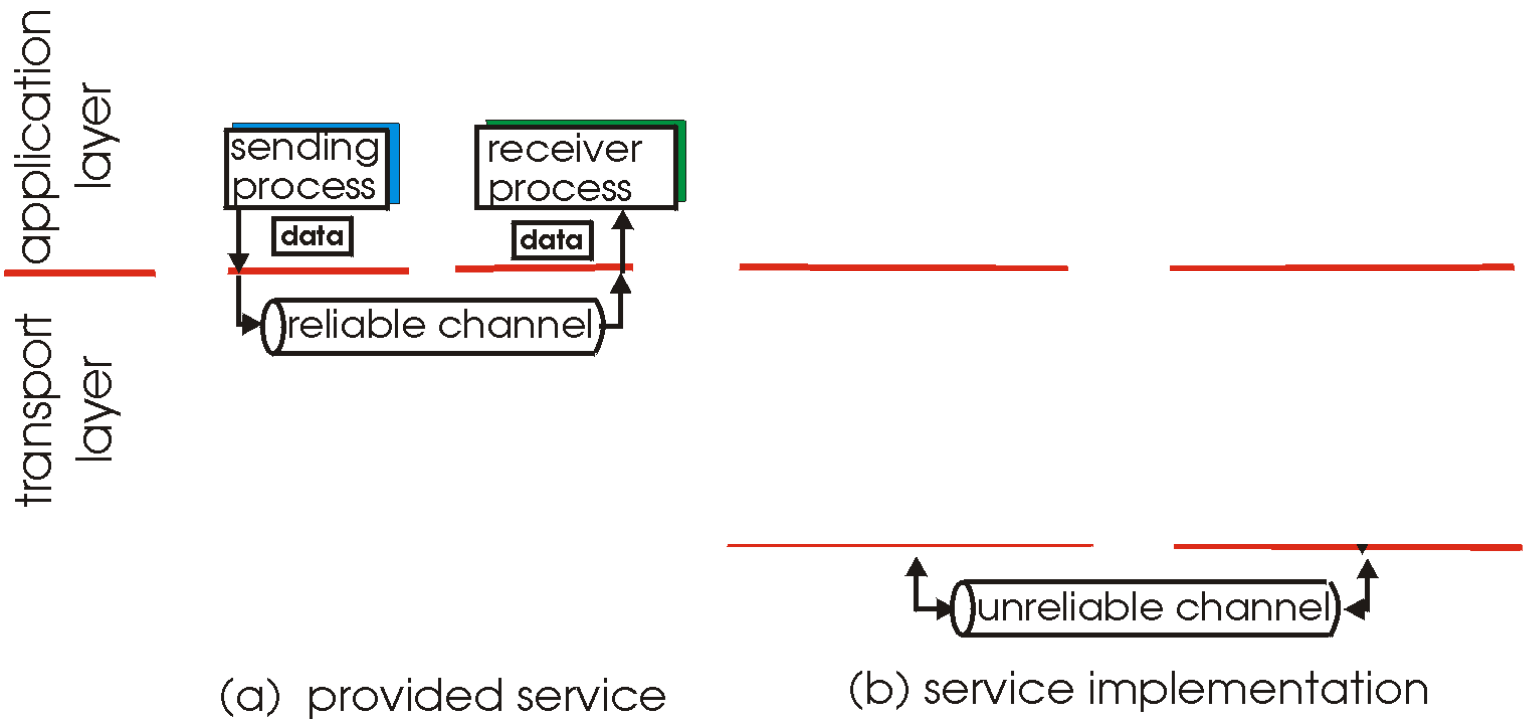

- characteristics of unreliable channel will determine complexity of reliable data transfer protocol (rdt)

Principles of reliable data transfer

- important in application, transport, link layers
  - top-10 list of important networking topics!

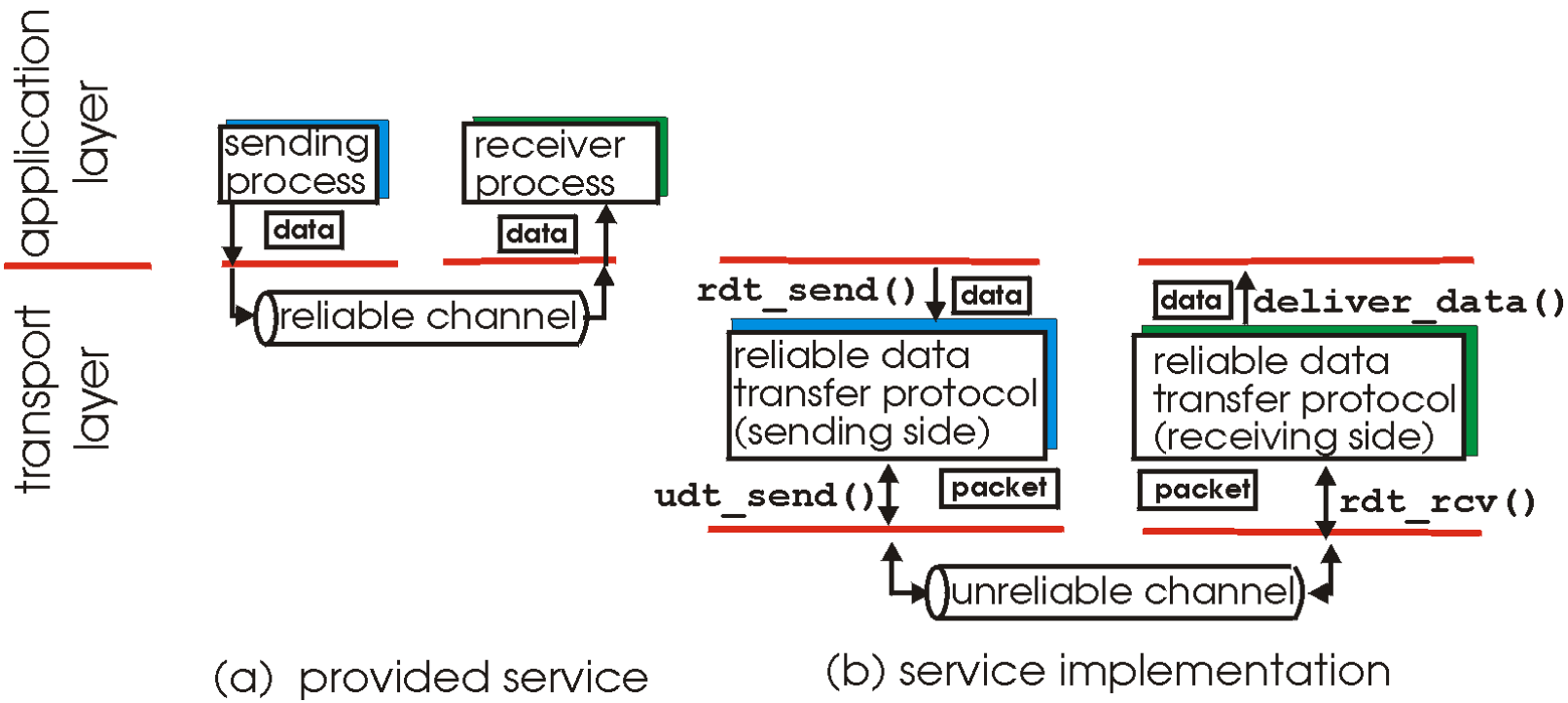

- characteristics of unreliable channel will determine complexity of reliable data transfer protocol (rdt)

Reliable data transfer: getting started

rdt_send(): called from above, (e.g., by app.). Passed data to deliver to receiver upper layer

deliver_data(): called by **rdt** to deliver data to upper

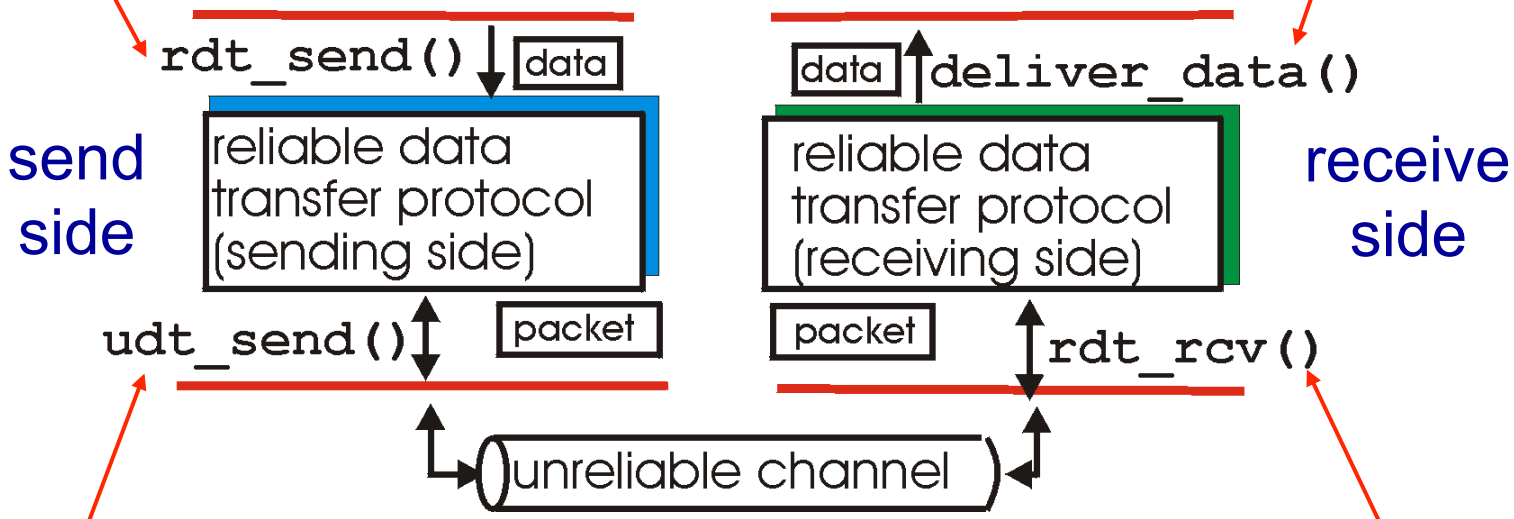

udt_send(): called by rdt, to transfer packet over unreliable channel to receiver

rdt_rcv(): called when packet arrives on rcv-side of channel

Reliable data transfer: getting started

we'll:

- incrementally develop sender, receiver sides of reliable data transfer protocol (rdt)
- consider only unidirectional data transfer
  - but control info will flow on both directions!
- use finite state machines (FSM) to specify sender, receiver

state: when in this "state" next state uniquely determined by next event

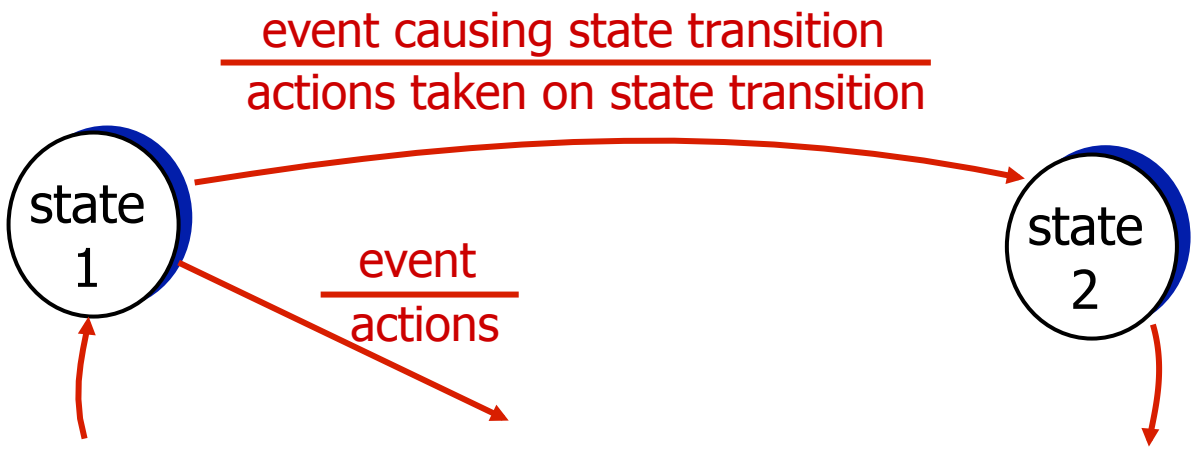

rdt1.0: reliable transfer over a reliable channel

- underlying channel perfectly reliable
  - no bit errors
  - no loss of packets
- separate FSMs for sender, receiver:
  - sender sends data into underlying channel
  - receiver reads data from underlying channel

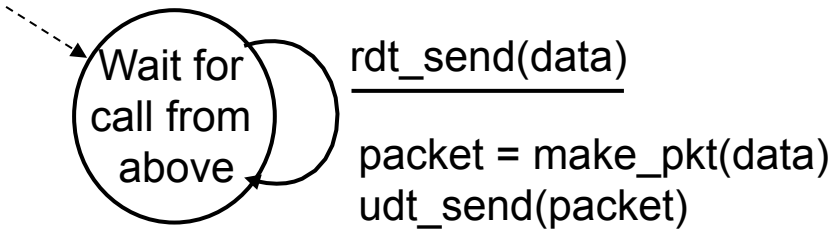

sender

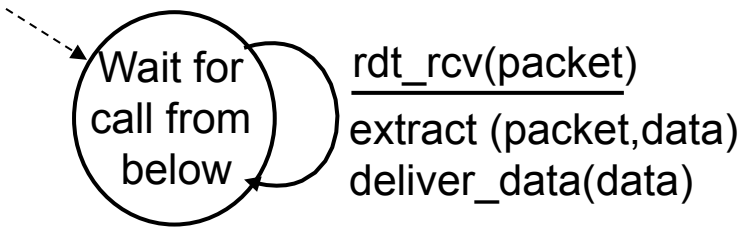

receiver

rdt2.0: channel with bit errors

- underlying channel may flip bits in packet
  - checksum to detect bit errors
- *the* question: how to recover from errors:

How do humans recover from "errors" during conversation?

rdt2.0: channel with bit errors

- underlying channel may flip bits in packet
  - checksum to detect bit errors
- *the* question: how to recover from errors:
  - *acknowledgements (ACKs):* receiver explicitly tells sender that pkt received OK
  - *negative acknowledgements (NAKs):* receiver explicitly tells sender that pkt had errors
  - sender retransmits pkt on receipt of NAK
- new mechanisms in `rdt2.0` (beyond `rdt1.0`):
  - error detection
  - feedback: control msgs (ACK,NAK) from receiver to sender

rdt2.0: FSM specification

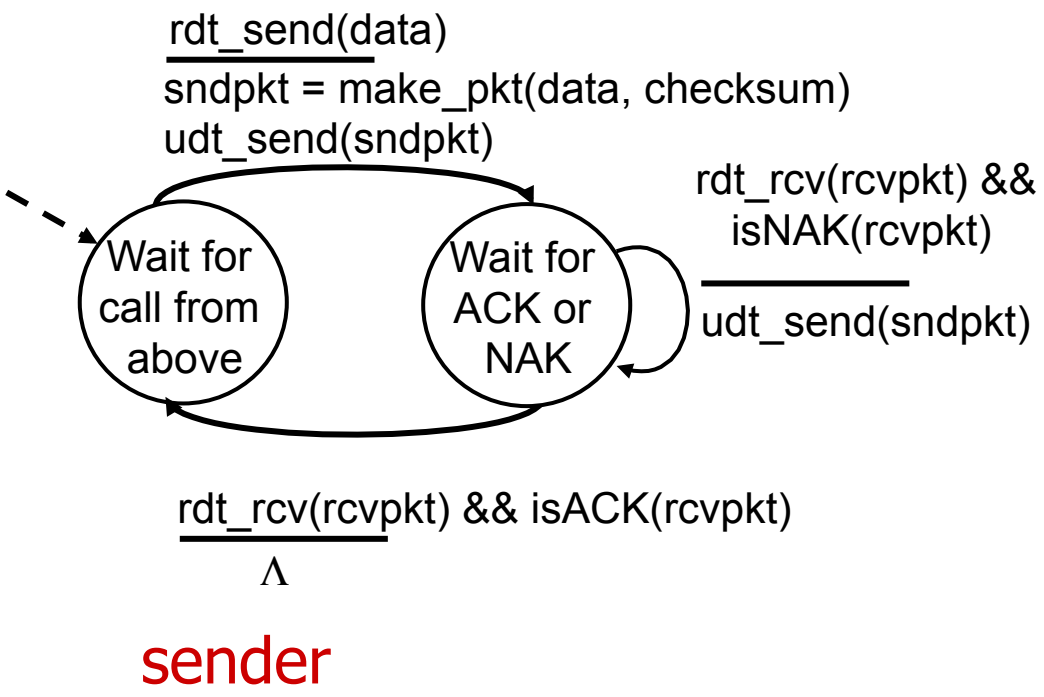

sender

receiver

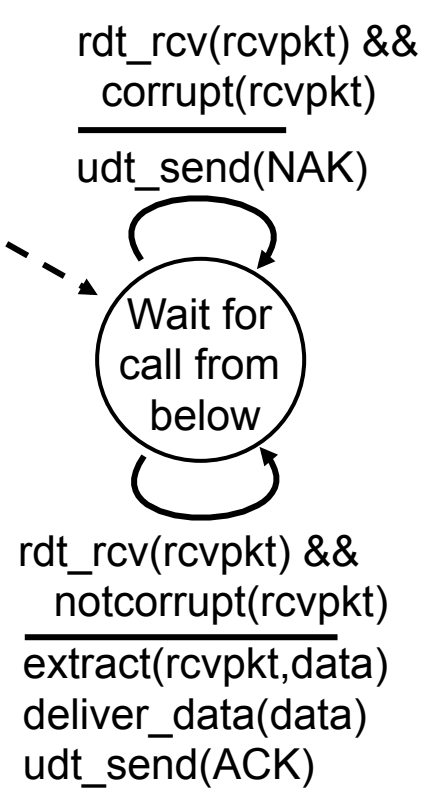

rdt2.0: operation with no errors

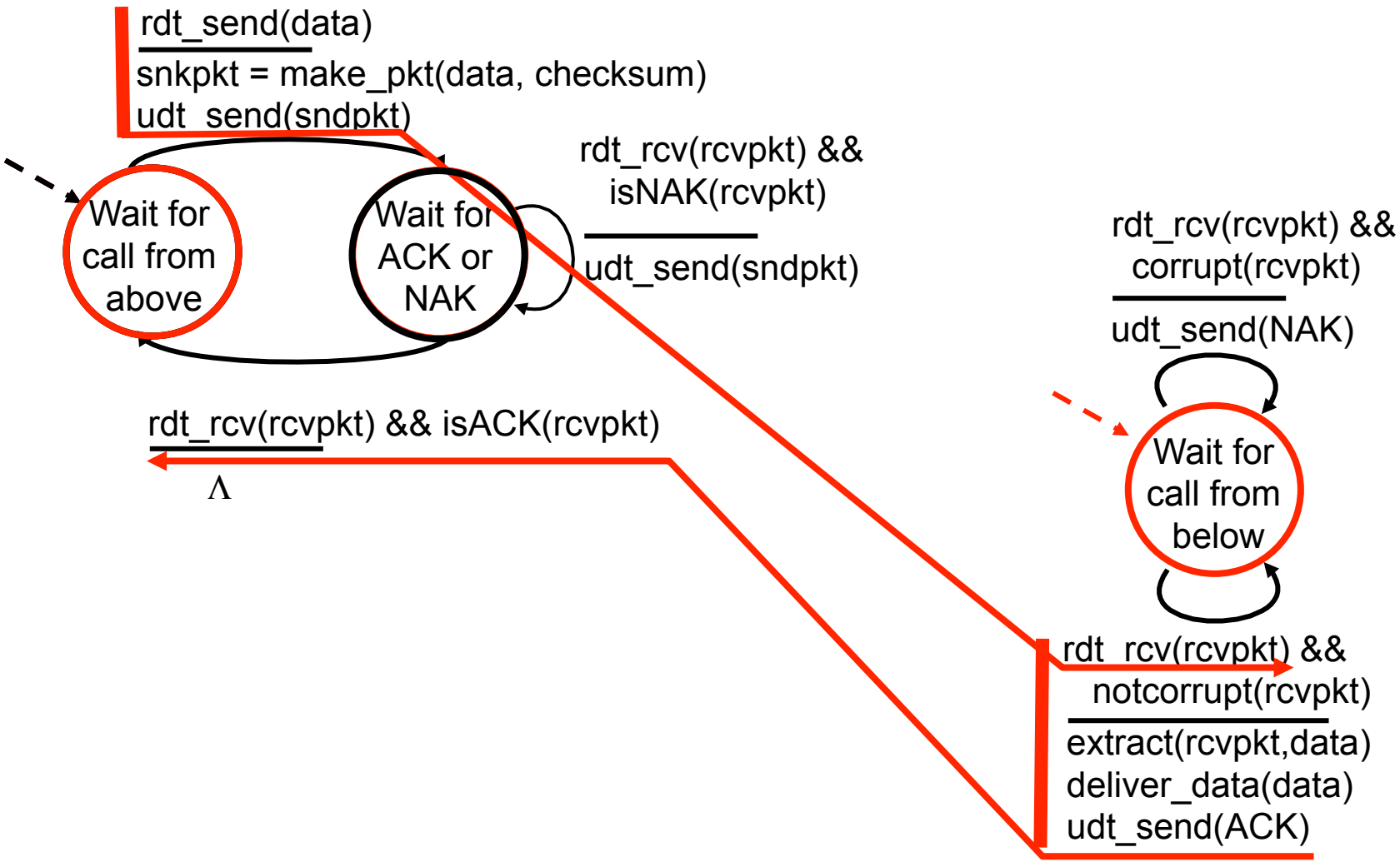

rdt2.0: error scenario

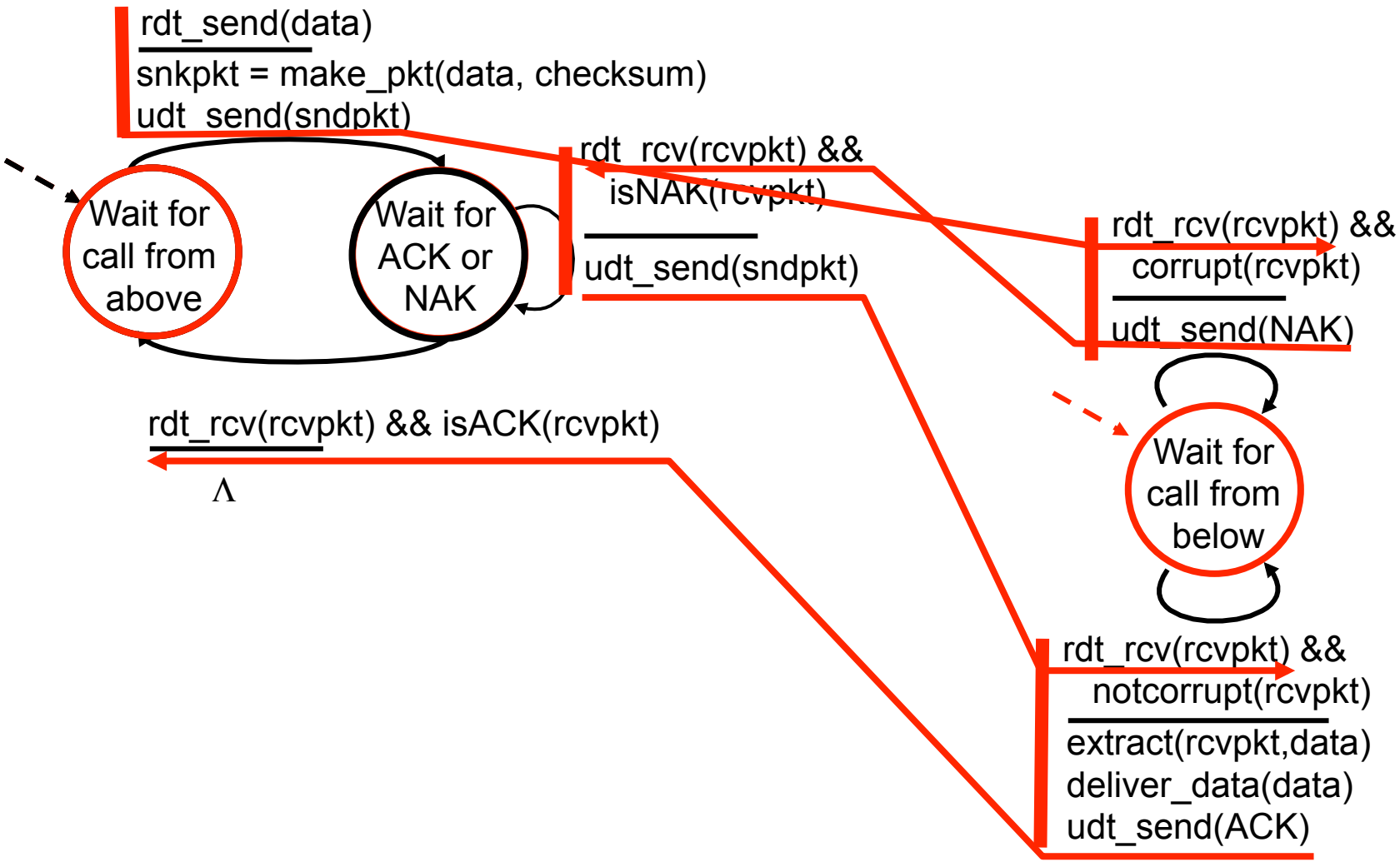

rdt2.0 has a fatal flaw!

what happens if ACK/NAK corrupted?

- sender doesn't know what happened at receiver!
- can't just retransmit: possible duplicate

handling duplicates:

- sender retransmits current pkt if ACK/NAK corrupted
- sender adds *sequence number* to each pkt
- receiver discards (doesn't deliver up) duplicate pkt

stop and wait

sender sends one packet, then waits for receiver response

rdt2.1: sender, handles garbled ACK/NAKs

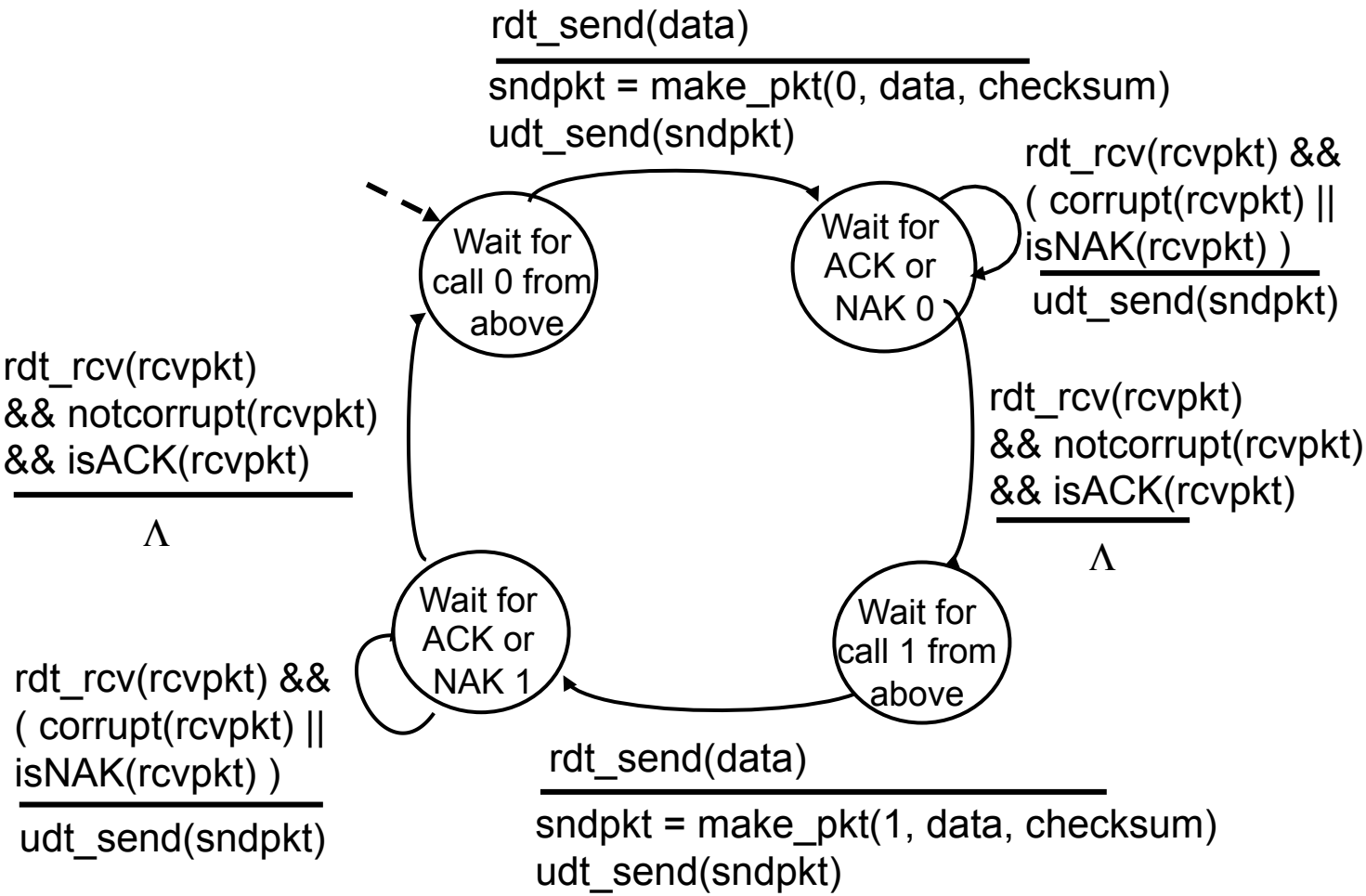

rdt2.1: receiver, handles garbled ACK/NAKs

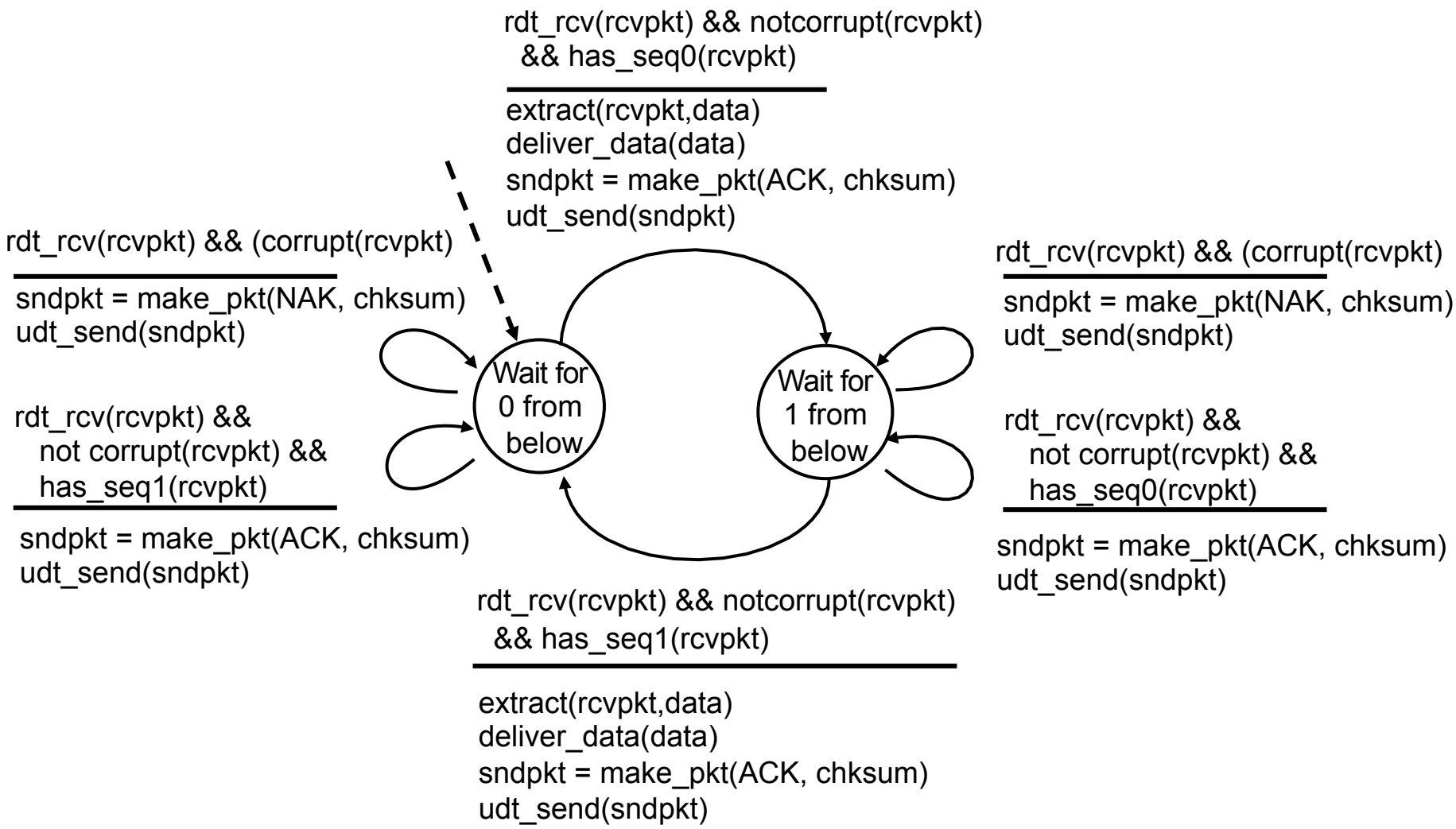

rdt2.1: discussion

sender:

- seq # added to pkt
- two seq. #'s (0,1) will suffice. Why?
- must check if received ACK/NAK corrupted
- twice as many states
  - state must "remember" whether "expected" pkt should have seq # of 0 or 1

receiver:

- must check if received packet is duplicate
  - state indicates whether 0 or 1 is expected pkt seq #
- note: receiver can *not* know if its last ACK/NAK received OK at sender

rdt2.2: a NAK-free protocol

- same functionality as rdt2.1, using ACKs only
- instead of NAK, receiver sends ACK for last pkt received OK
  - receiver must *explicitly* include seq # of pkt being ACKed
- duplicate ACK at sender results in same action as NAK: *retransmit current pkt*

rdt2.2: sender, receiver fragments

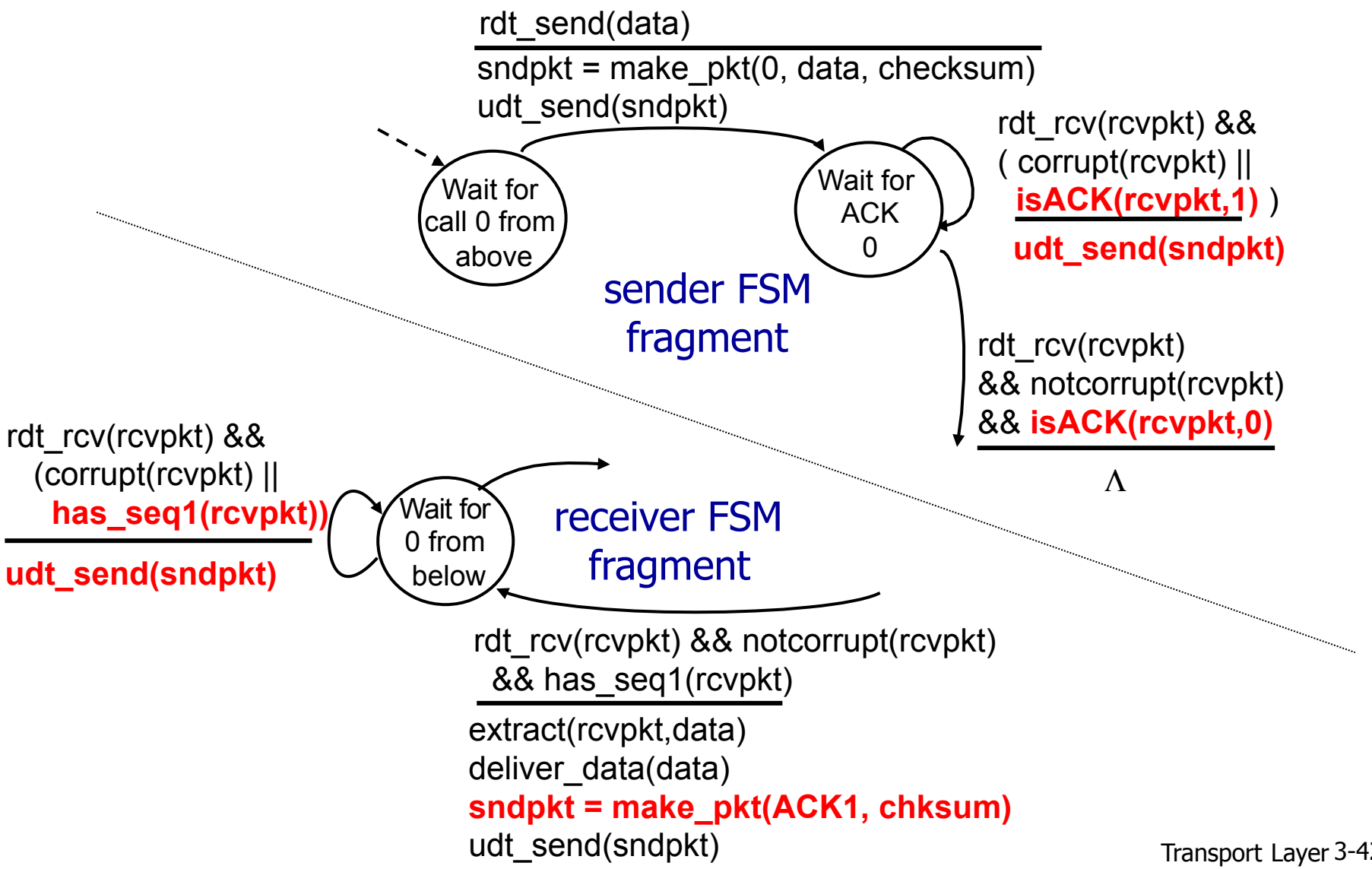

rdt3.0: channels with errors *and* loss

new assumption:
underlying channel can also lose packets (data, ACKs)

- checksum, seq. #, ACKs, retransmissions will be of help … but not enough

approach: sender waits "reasonable" amount of time for ACK

- retransmits if no ACK received in this time
- if pkt (or ACK) just delayed (not lost):
  - retransmission will be duplicate, but seq. #'s already handles this
  - receiver must specify seq # of pkt being ACKed
- requires countdown timer

rdt3.0 sender

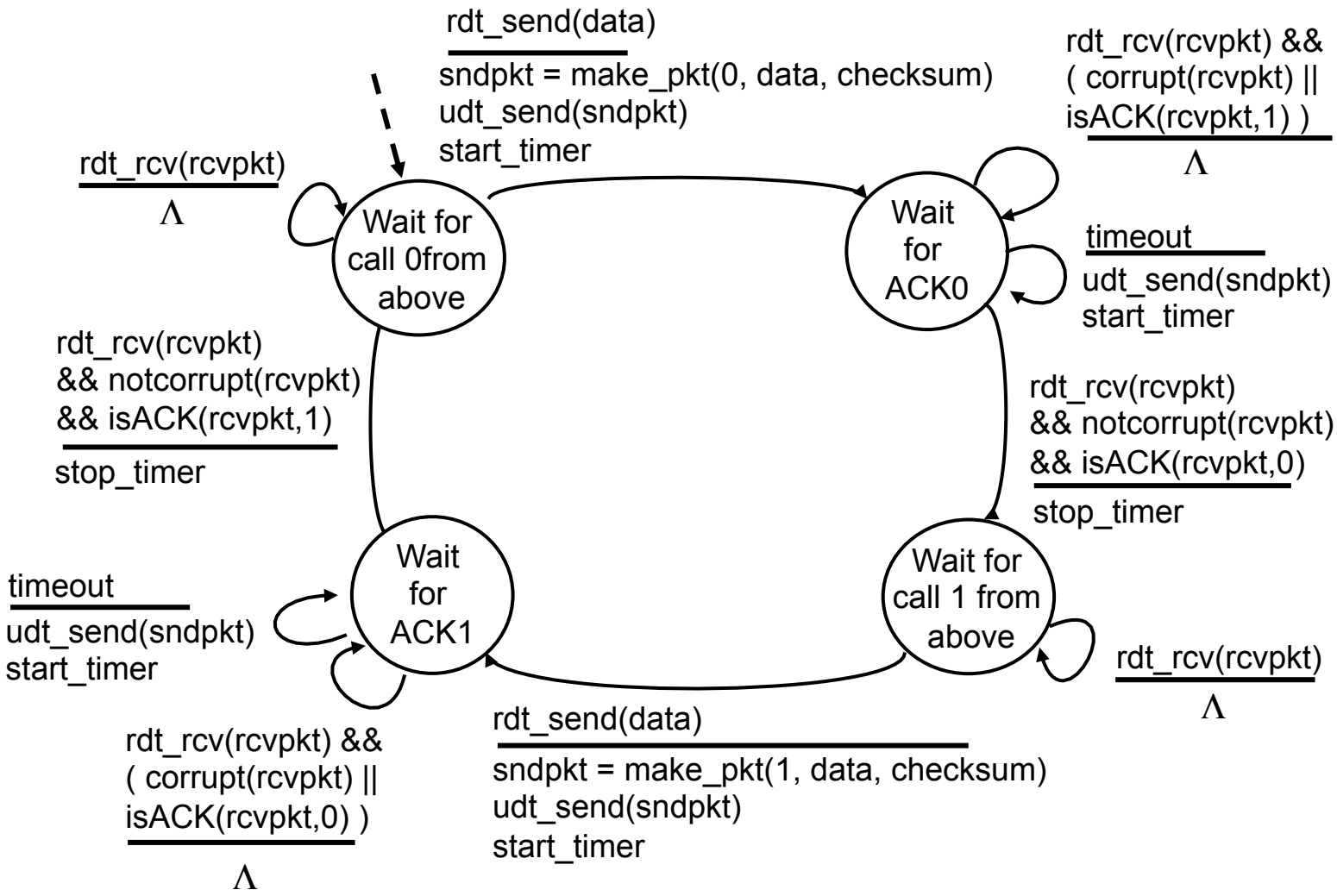

rdt3.0 in action

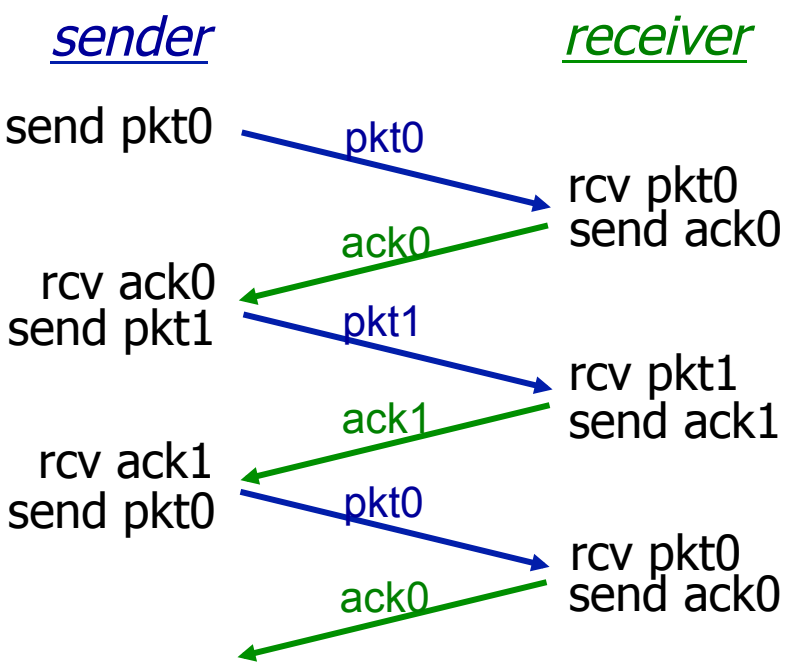

(a) no loss

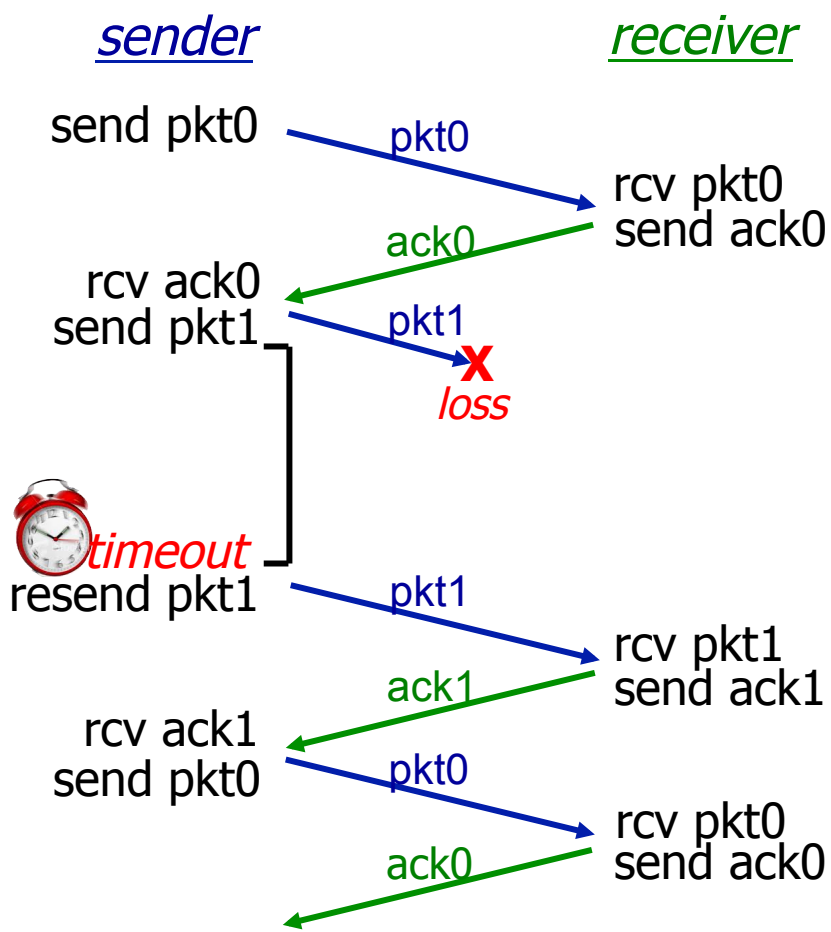

(b) packet loss

rdt3.0 in action

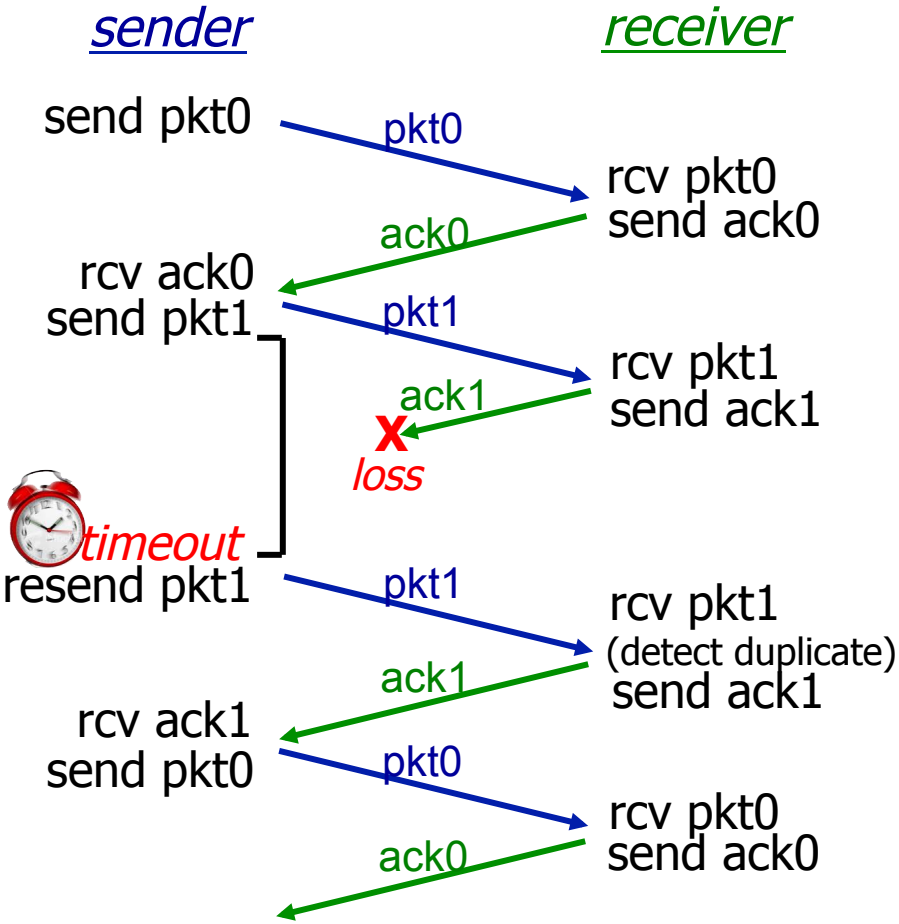

(c) ACK loss

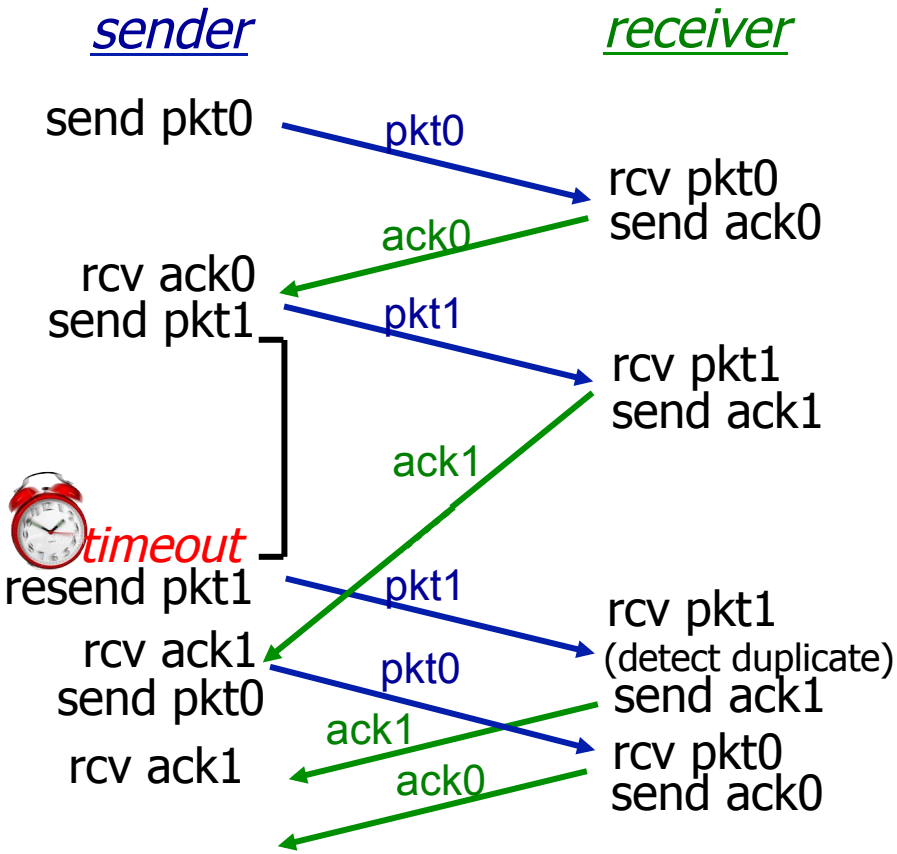

(d) premature timeout/ delayed ACK